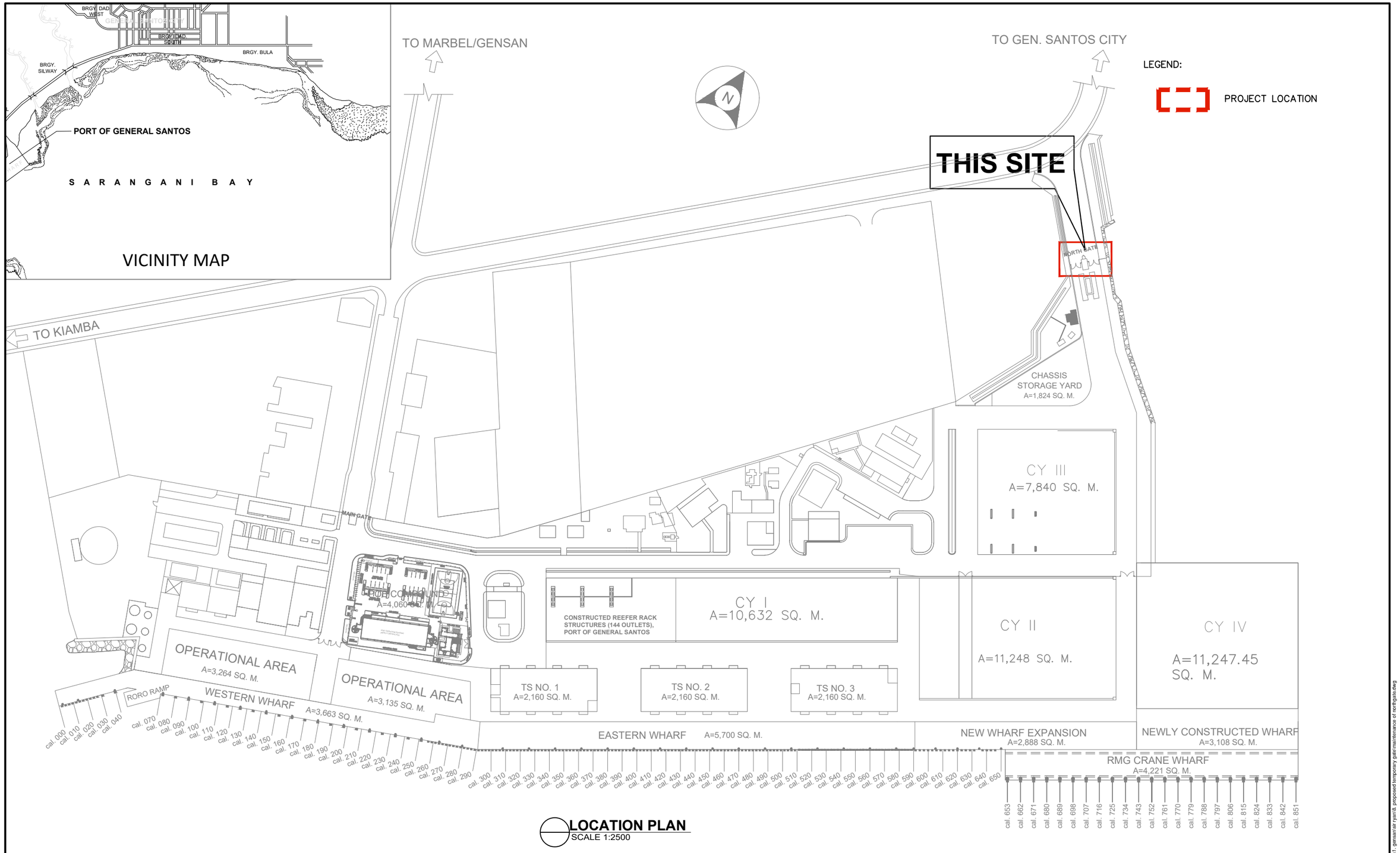

LOCATION PLAN
SCALE 1:2500

PROJECT TITLE	PREPARED BY:	CHECKED BY:	REVIEWED BY:	RECOMMENDING APPROVAL:	CONFORME BY:	APPROVED BY:	SHEET CONTENT:	DATE:
MAINTENANCE OF NORTHGATE BY SUPPLY AND INSTALLATION OF TEMPORARY GATE LOCATION PORT OF GENERAL SANTOS, MAKAR WHARF, GENERAL SANTOS CITY	JOSE CARLITO Y. BRIONES JR. DRAFTSMAN II (COS)	RYAN L. BADAJOS SENIOR ENGINEER A	MARIA VIVIEN M. TANCO PRINCIPAL ENGINEER A	EDELPETER L. DE LA ROSA ACTING ESD MANAGER	JULIE S. BONTIA ACTING PPD MANAGER	ATTY. CESAR M. DATAYA PORT MANAGER	1. LOCATION PLAN	1/5

PHILIPPINE PORTS AUTHORITY

c:\users\lenovo legion 5\desktop\gas 2025\61. gensan\ar ryan\1. proposed temporary gate\maintenance of northgate.dwg

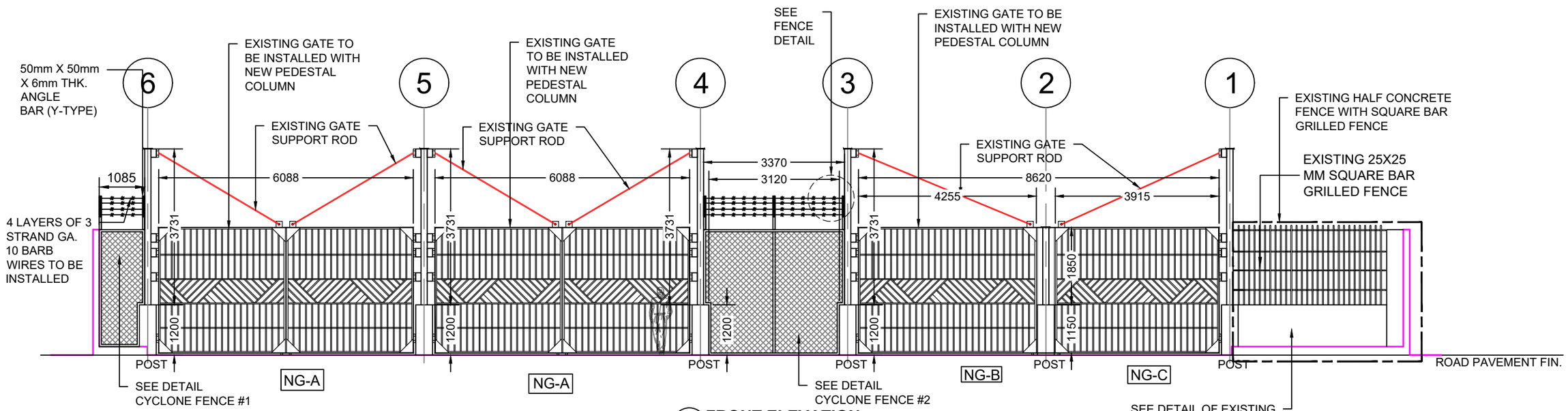

FRONT ELEVATION
SCALE 1:100

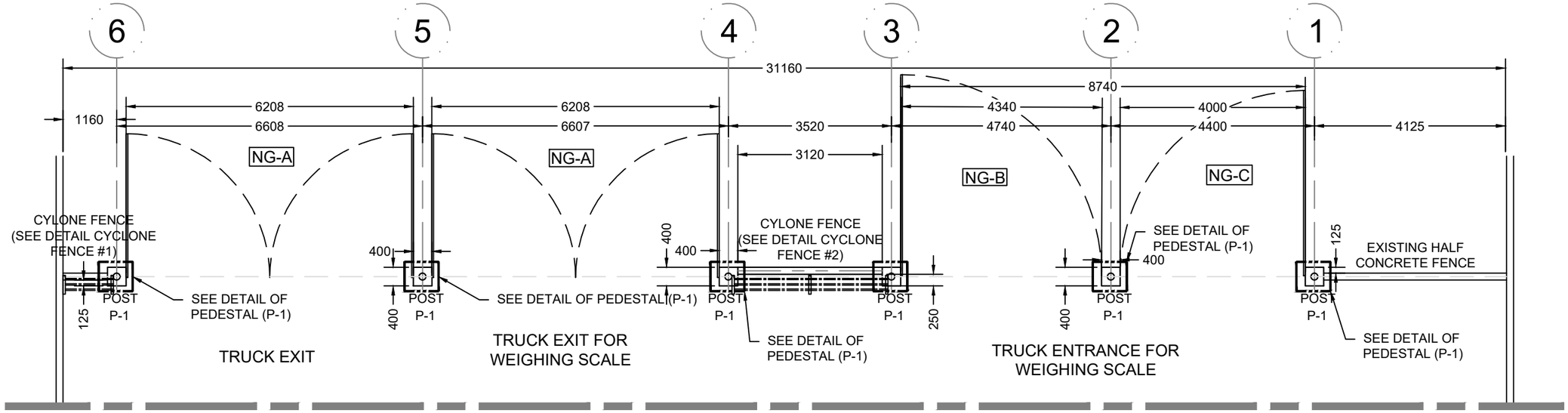

TOP VIEW
SCALE 1:100

PROJECT TITLE	PREPARED BY:	CHECKED BY:	REVIEWED BY:	RECOMMENDING APPROVAL:	CONFORME BY:	APPROVED BY:	SHEET CONTENT:	DATE:
MAINTENANCE OF NORTHGATE BY SUPPLY AND INSTALLATION OF TEMPORARY GATE LOCATION PORT OF GENERAL SANTOS, MAKAR WHARF, GENERAL SANTOS CITY	JOSE CARLITO Y. BRIONES JR. DRAFTSMAN II (COS)	RYAN L. BADAJOS SENIOR ENGINEER A	MARIA VIVIEN M. TANCO PRINCIPAL ENGINEER A	EDELPETER L. DE LA ROSA ACTING ESD MANAGER	JULIE S. BONTIA ACTING PPD MANAGER	ATTY. CESAR M. DATAYA PORT MANAGER	1. FRONT VIEW 2. TOP VIEW	2/5

c:\users\ryan.briones\onedrive - philippine ports authority\documents\projects\proposed temporary gate\temporary gate 19.dwg

NOTE ON PAINTING WORKS:

1. FOR CONCRETE, APPLY ONE(1) COAT OF CONCRETE PRIMER PAINT, TWO(2) TOP COAT OF WATER-BASED PAINT.
2. FOR METAL, APPLY ONE(1) COAT OF EPOXY PRIMER, TWO(2) COAT OF EPOXY ENAMEL PAINT.
3. COLOR SUBJECT FOR PPA'S APPROVAL

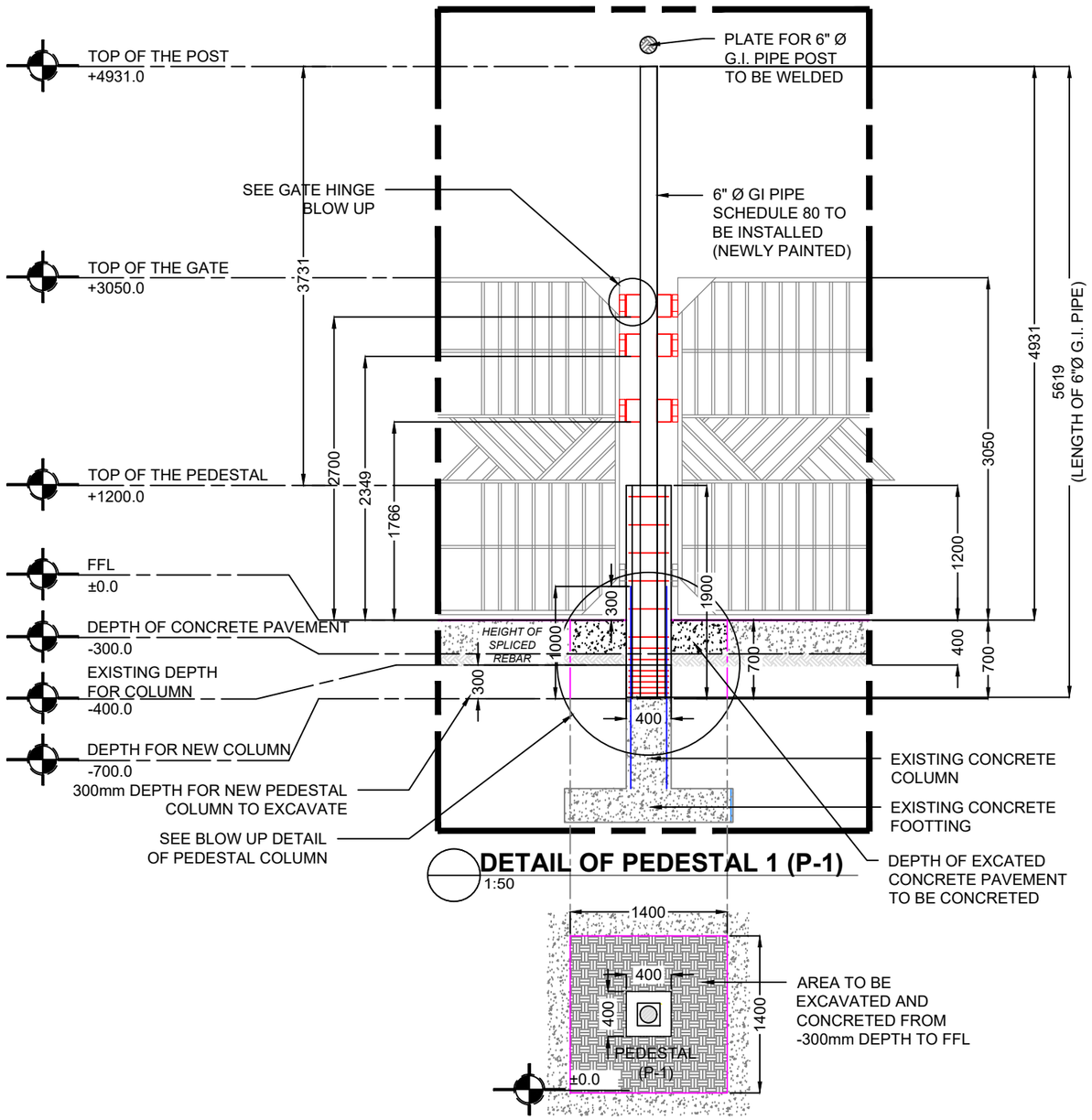

DETAIL OF PEDESTAL 1 (P-1)
1:50

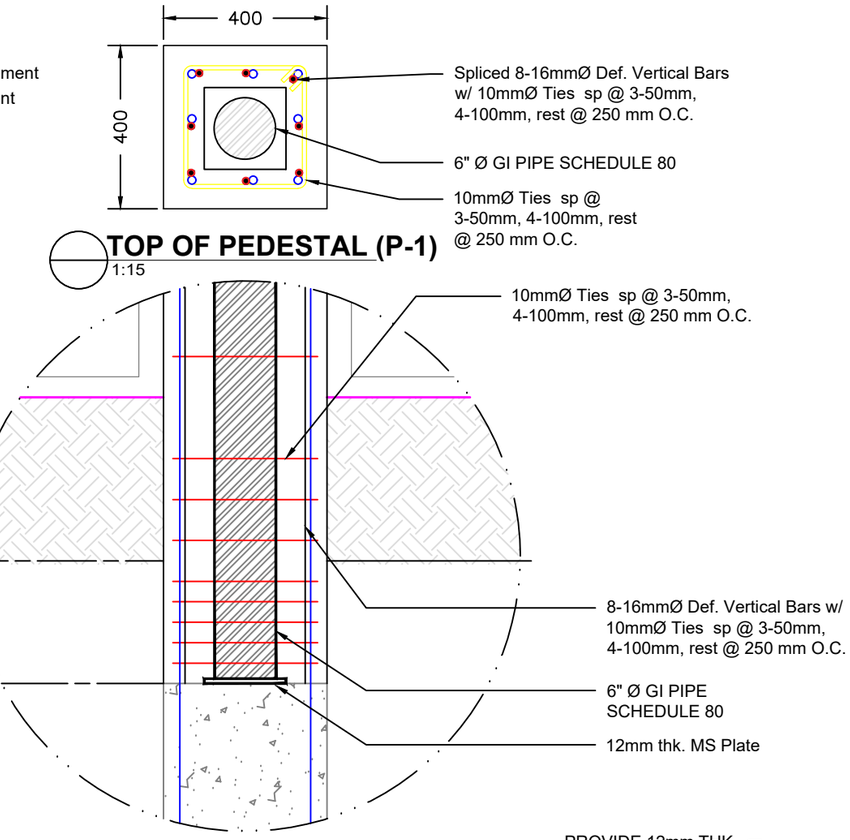

TOP OF PEDESTAL (P-1)
1:15

BLOW UP DETAIL OF PEDESTAL
1:15

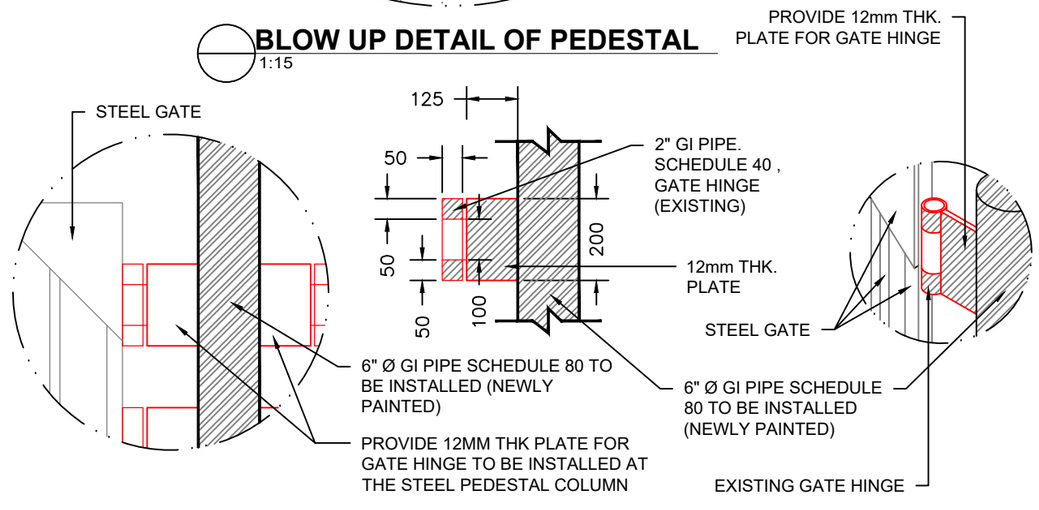

EXISTING GATE HINGE BLOW UP DETAIL
1:15

NOTE:
NUMBER OF HINGES EACH GATE = 6 PCS
TOTAL NUMBER OF HINGES = 9 PCS

PROJECT TITLE	PREPARED BY:	CHECKED BY:	REVIEWED BY:	RECOMMENDING APPROVAL:	CONFORME BY:	APPROVED BY:	SHEET CONTENT:	DATE:
MAINTENANCE OF NORTHGATE BY SUPPLY AND INSTALLATION OF TEMPORARY GATE LOCATION PORT OF GENERAL SANTOS, MAKAR WHARF, GENERAL SANTOS CITY	JOSE CARLITO Y. BRIONES JR. DRAFTSMAN II (COS)	RYAN L. BADAJOS SENIOR ENGINEER A	MARIA VIVIEN M. TANCO PRINCIPAL ENGINEER A	EDELPETER L. DE LA ROSA ACTING ESD MANAGER	JULIE S. BONTIA ACTING PPD MANAGER	ATTY. CESAR M. DATAYA PORT MANAGER	1. DETAIL OF PEDESTAL (P-1) 2. TOP OF PEDESTAL (P-1) 3. BLOW UP DETAIL OF PEDESTAL 4. EXISTING GATE HINGE BLOW UP DETAIL	3/5

Document is property of the Philippine Ports Authority. Unauthorized reproduction or use prohibited.

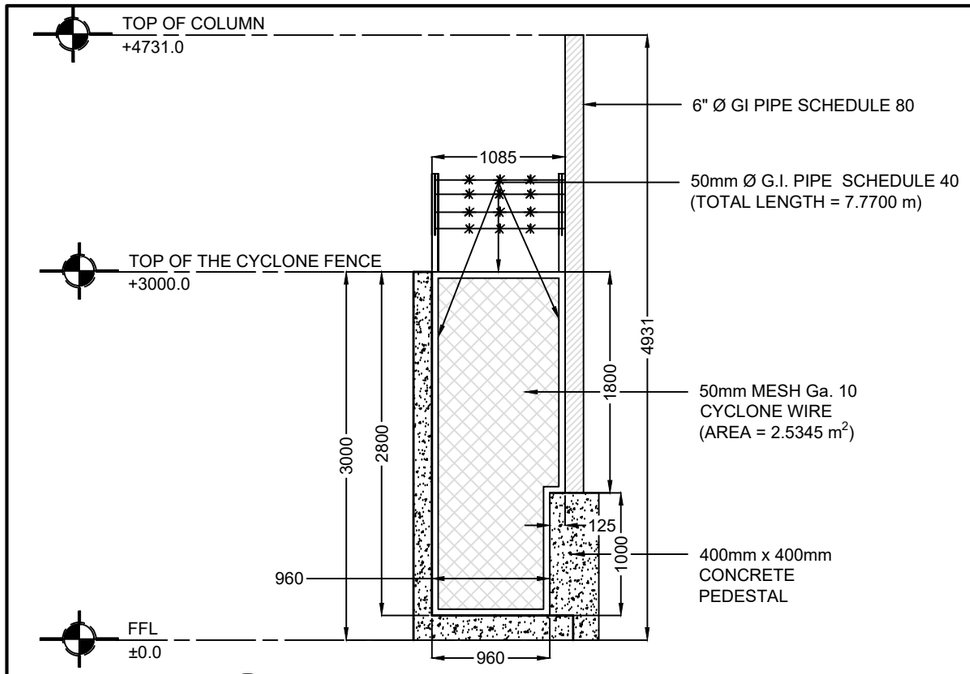

DETAIL CYCLONE FENCE #1
1:50

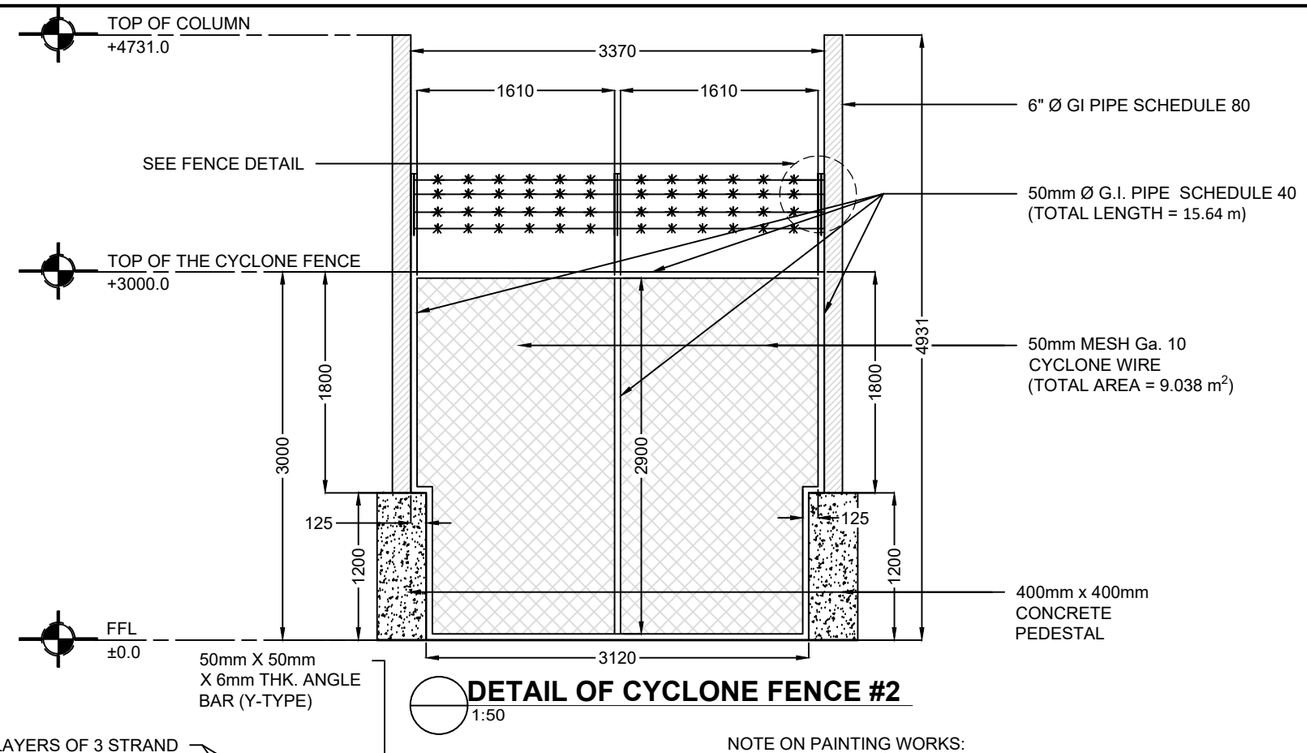

DETAIL OF CYCLONE FENCE #2
1:50

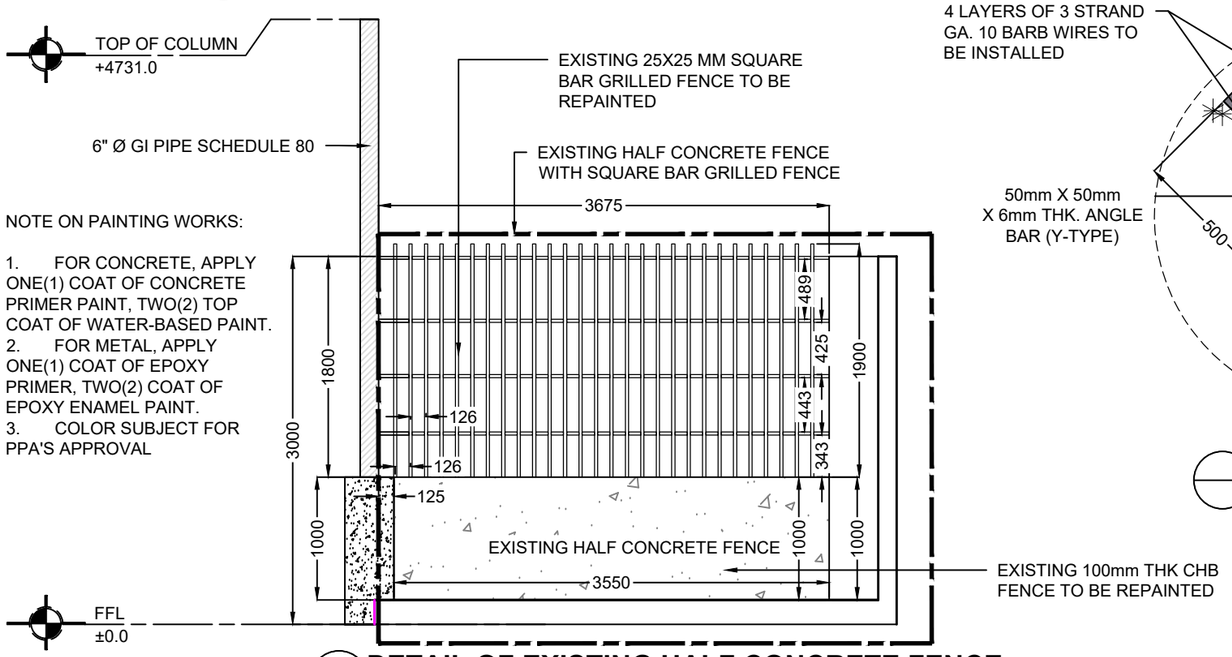

NOTE ON PAINTING WORKS:

1. FOR CONCRETE, APPLY ONE(1) COAT OF CONCRETE PRIMER PAINT, TWO(2) TOP COAT OF WATER-BASED PAINT.
2. FOR METAL, APPLY ONE(1) COAT OF EPOXY PRIMER, TWO(2) COAT OF EPOXY ENAMEL PAINT.
3. COLOR SUBJECT FOR PPA'S APPROVAL

DETAIL OF EXISTING HALF CONCRETE FENCE
1:50

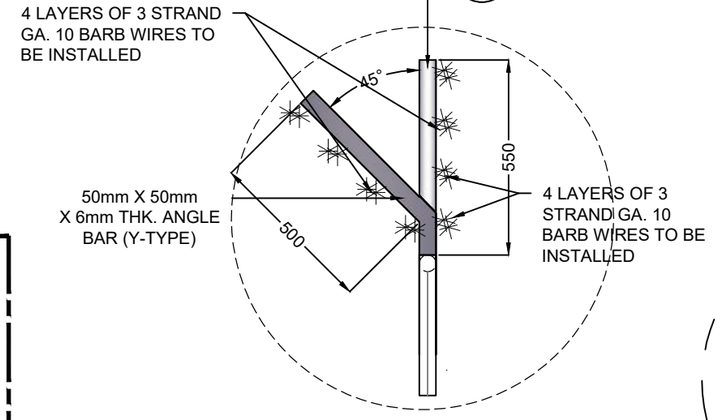

FENCE DETAIL
NTS

NOTE ON PAINTING WORKS:

1. FOR CONCRETE, APPLY ONE(1) COAT OF CONCRETE PRIMER PAINT, TWO(2) TOP COAT OF WATER-BASED PAINT.
2. FOR METAL, APPLY ONE(1) COAT OF EPOXY PRIMER, TWO(2) COAT OF EPOXY ENAMEL PAINT.
3. COLOR SUBJECT FOR PPA'S APPROVAL

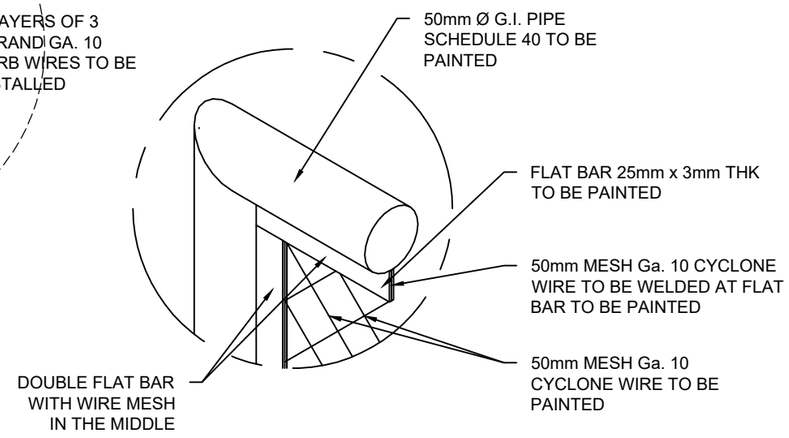

CYCLONE FENCE DETAIL
1:50

PHILIPPINE PORTS AUTHORITY	PROJECT TITLE	PREPARED BY:	CHECKED BY:	REVIEWED BY:	RECOMMENDING APPROVAL:	CONFORME BY:	APPROVED BY:	SHEET CONTENT:	DATE:
	MAINTENANCE OF NORTHGATE BY SUPPLY AND INSTALLATION OF TEMPORARY GATE LOCATION PORT OF GENERAL SANTOS, MAKAR WHARF, GENERAL SANTOS CITY	JOSE CARLITO Y. BRIONES JR. DRAFTSMAN II (COS)	RYAN L. BADAJOS SENIOR ENGINEER A	MARIA VIVIEN M. TANCO PRINCIPAL ENGINEER A	EDELPETER L. DE LA ROSA ACTING ESD MANAGER	JULIE S. BONTIA ACTING PPD MANAGER	ATTY. CESAR M. DATAYA PORT MANAGER	1. DETAIL OF CYCLONE FENCE #1 2. DETAIL OF CYCLONE FENCE #2 3. DETAIL OF EXISTING HALF CONCRETE FENCE 4. CYCLONE FENCE DETAIL 5. FENCE DETAIL	4/5

This document is the property of Philippine Ports Authority. Unauthorized use or reproduction is prohibited.

NOTE ON PAINTING WORKS FOR EXISTING GATES:

1. APPLY TWO(2) COAT OF EPOXY ENAMEL PAINT.

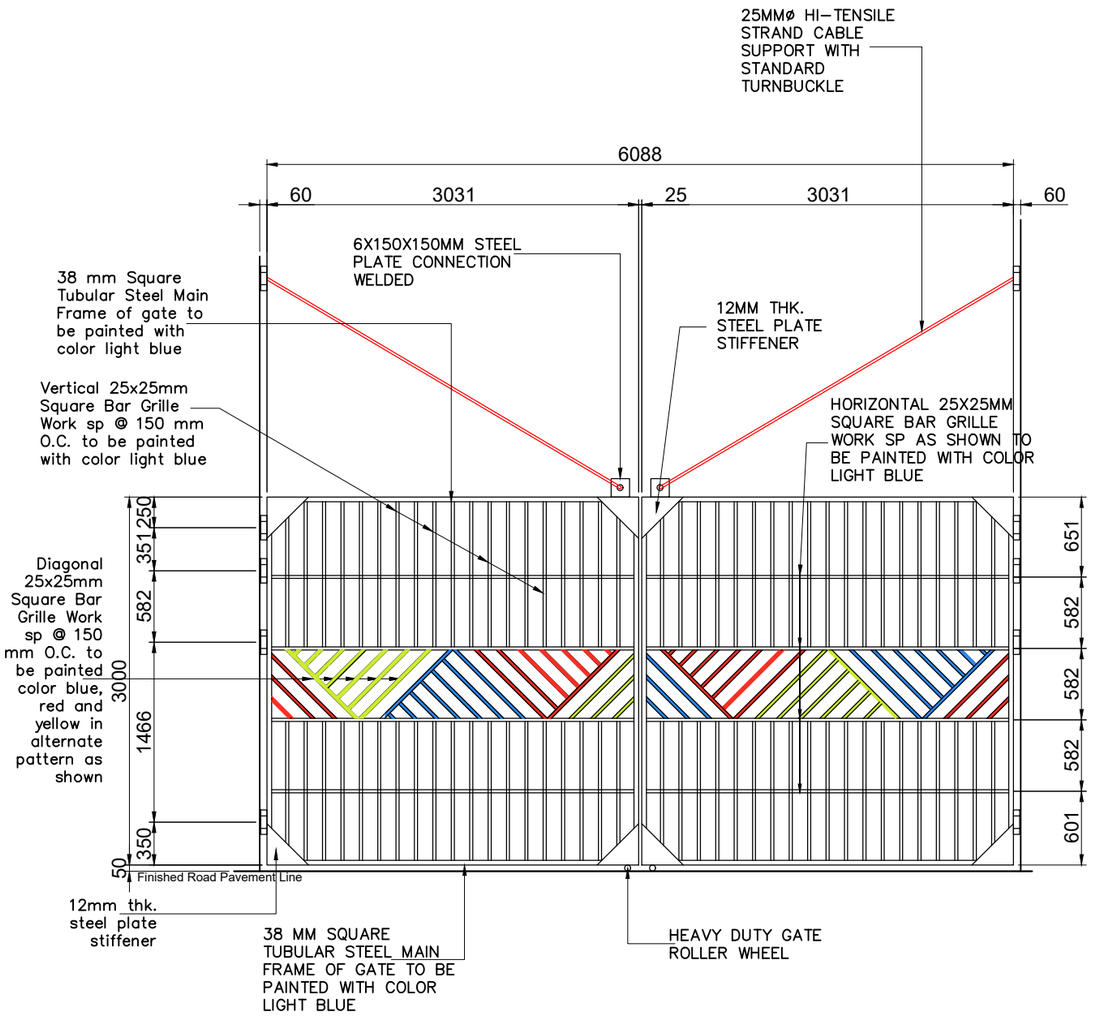

EXISTING VEHICLE GATE A (NG-A) - 2 units
SCALE 1:50

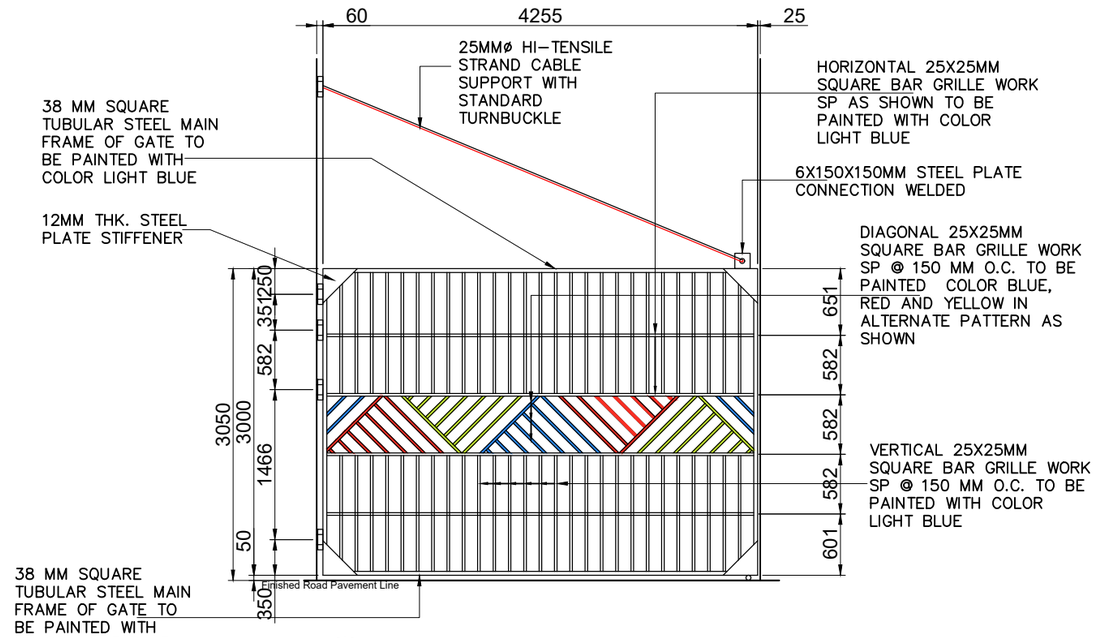

EXISTING VEHICLE GATE A (NG-B) - 1 unit
SCALE 1:60

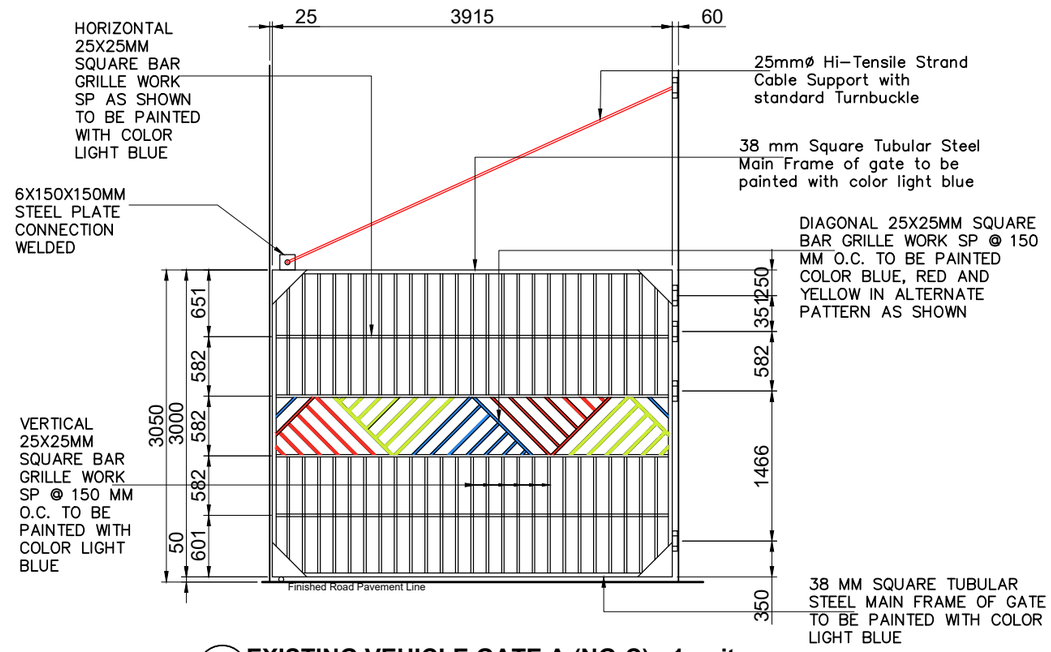

EXISTING VEHICLE GATE A (NG-C) - 1 unit
SCALE 1:60

PHILIPPINE PORTS AUTHORITY	PROJECT TITLE	PREPARED BY:	CHECKED BY:	REVIEWED BY:	RECOMMENDING APPROVAL:	CONFORME BY:	APPROVED BY:	SHEET CONTENT:	DATE:
	MAINTENANCE OF NORTHGATE BY SUPPLY AND INSTALLATION OF TEMPORARY GATE LOCATION PORT OF GENERAL SANTOS, MAKAR WHARF, GENERAL SANTOS CITY	JOSE CARLITO Y. BRIONES JR. DRAFTSMAN II (COS)	RYAN L. BADAJOS SENIOR ENGINEER A	MARIA VIVIEN M. TANCO PRINCIPAL ENGINEER A	EDELPETER L. DE LA ROSA ACTING ESD MANAGER	JULIE S. BONTIA ACTING PPD MANAGER	ATTY. CESAR M. DATAYA PORT MANAGER	1. VEHICLE GATE A (NG-A) 2. VEHICLE GATE A (NG-B) 3. VEHICLE GATE A (NG-C)	5/5

Generated using Autodesk Design Suite 2024 - 13/02/24 - Unauthorized use of Autodesk products for purposes other than those specified by Autodesk is prohibited.